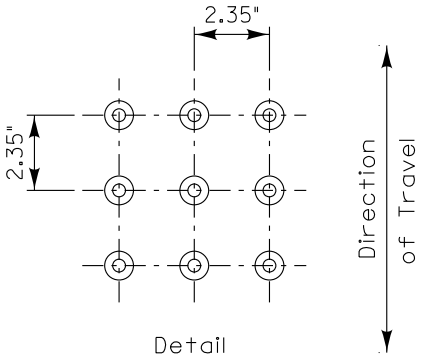

Detail
Detectable Warnings
Square Pattern
(Scale 1" = 6")

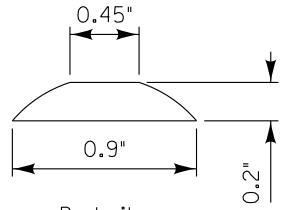

Detail
Truncated Dome
(Scale 1" = 1")

Location Detail
Signal Post, Pedestrian Push
Button Post, and Mast Arm

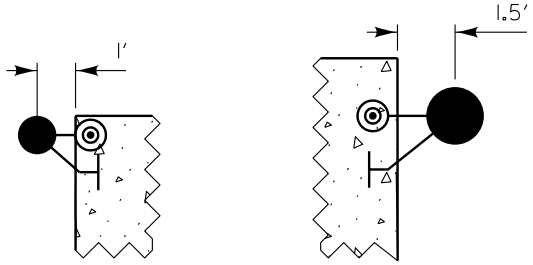

Signal Post/
Push Button Post

Mast Arm

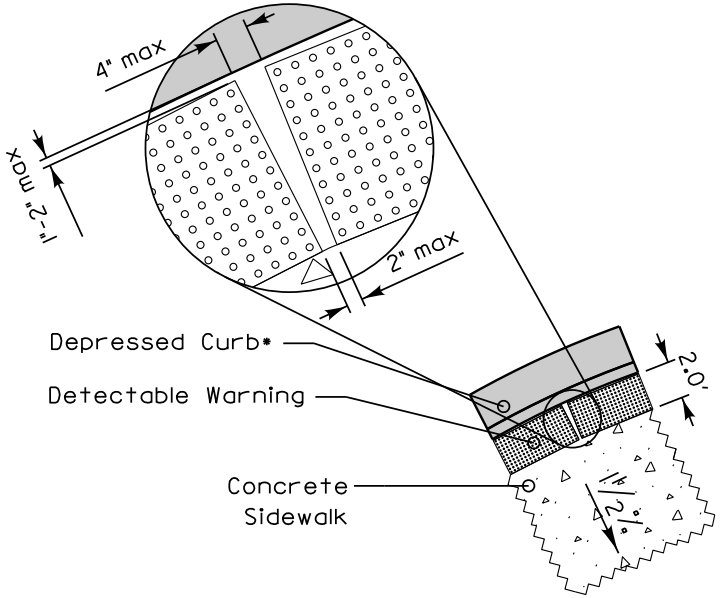

*GENERAL NOTES:

1. Cross slopes on sidewalks and paths shall not exceed 1.5% except at locations detailed on the plans.
2. Only whole cast iron panels from the manufacturer shall be used for the detectable warnings. Cut panels shall not be allowed.
3. The gutter slope for the DEPRESSED CURB adjacent to the curb ramp shall be a maximum of 5% (standard curb and gutter is 6%). The back of curb rise shall be a maximum of 1/2" (standard depressed curb is 1 1/2"). See IDOT standard 606001 for the different curb dimensions.
4. The Depressed Curb and the Transition Curb will be paid for as COMBINATION CONCRETE CURB AND GUTTER of the type adjacent to the curb ramp.
5. The DETECTABLE WARNINGS shall be installed according to Article 424.09 of the IDOT Standard Specifications and the LCDOT specification 42400800 DETECTABLE WARNINGS. Detectable warnings shall be measured and paid for per square foot.

REVISIONS	DATE
Added Warning Details	8/1/2009
Updates & Remove Duplicates	7/14/2015

LakeCounty
Division of Transportation

APPROVED BY: M. G. ZEMAITIS
DATE: APRIL 1, 2007

DETECTABLE WARNINGS and PEDESTRIAN PUSHBUTTON LOCATIONS

LC4201